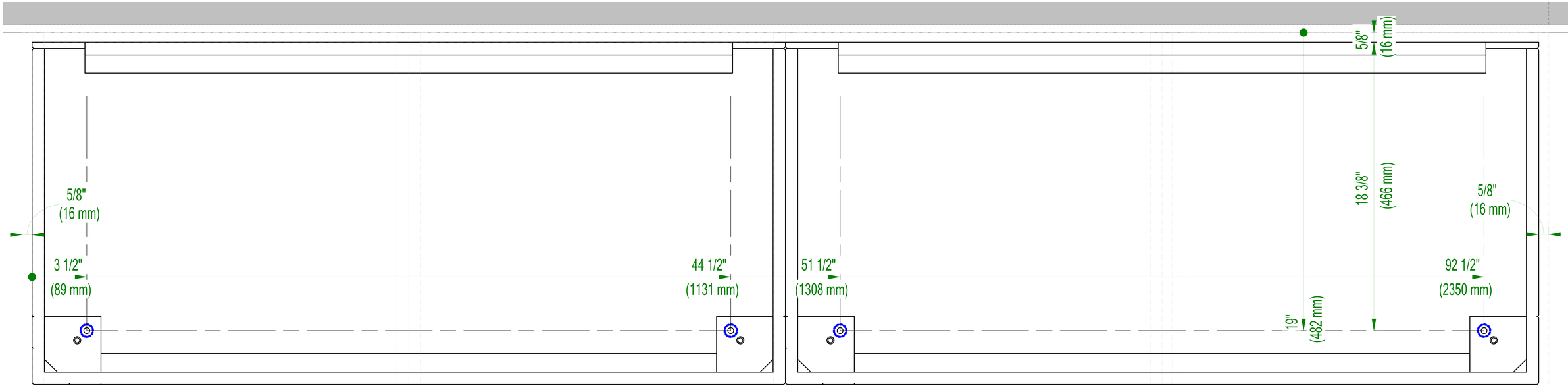

ORIPOD 1-212-966-0000 www.oripodworldwide.com sales@oripodworldwide.com	Achorbolt Layout Full Scale LINEA Project: STERILIZATION CENTER Item #: ILOT-00-00-00 Draw by: Juan Marin	Prepared by: Nick Gladstone I-3t